Voltage Transformer

Model 460
rev 03182021

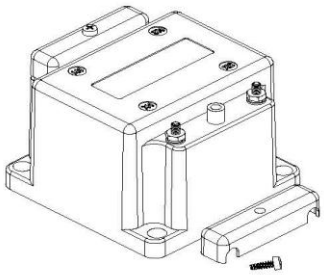

Model	460
Width	4.50
Height	3.50
Depth	4.63

CERTIFICATIONS:

E228202

223647

FREQUENCY:
60 Hz.

STANDARD SECONDARY VOLTAGE:
120 Volts

INSULATION LEVEL:
600 Volts. 10 kV BIL. full wave

ACCURACY CLASS:
0.6 W, 1.2 X at 60 Hz

THERMAL RATING:
150 VA AT 30°c. AMB, 100 VA AT 55°c. amb.

APPROXIMATE WEIGHT:
7.75 lbs.

CONNECTIONS:
-Terminals are brass studs No. 10-32 with one lockwasher, flat washer, and regular nut

MODEL 460
Approximate weight: 7.75 lbs.

CATALOG NUMBER NOT FUSED	VOLTAGE RATING	TURNS RATIO	REC. PRIMARY FUSE RATING
460-069	69.3:120	0.58:1	5
460-120	120:120	1:1	4
460-208	208:120	1.73:1	2
460-240	240:120	2:1	2
460-277	277:120	2.31:1	2
460-288	288:120	2.4:1	1.5
460-300	300:120	2.5:1	1.5
460-346	346:120	2.88:1	1.5
460-480*	480:120	4:1	1
460-600*	600:120	5:1	0.75

- Each transformer has two plastic terminal covers.
- The core and coil assembly is encased in a thermoplastic shell and filled with resin.
- These transformers are designed for operation line to line. They may also be operated line to ground or line to neutral at reduced voltage (58% of rated volts).
- It is desirable to use a 1.6 amp fuse in the secondary to protect the transformer.
- With two exceptions these transformers are ANSI C57.13 group 1. Those marked * are group 2.
- Models designed specifically for 50 Hz operation are avaliable with reduced performance consult factory for details.

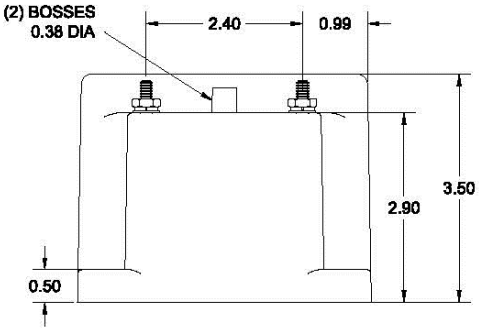

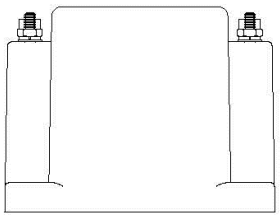

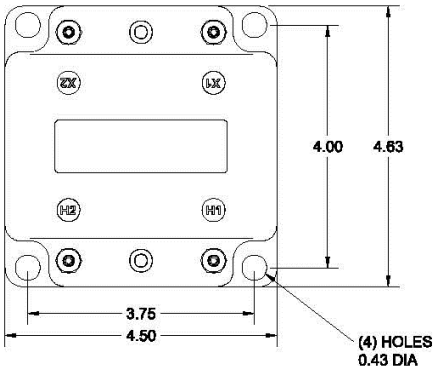

Products are manufactured in a plant whose quality management system has been certified to be in compliance with ISO 9001:2015 by NQA

Crompton Technology Inc,7538 Bath Rd,Mississauga,ON,L4T 1L2,T:905-671-2304,F:905-671-3661,info@cromptoncanada.com, www.cromptoncanada.com